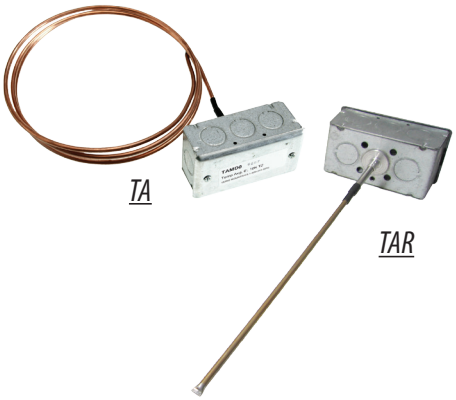

TA Series

Averaging Temperature Sensors

Product Overview

TA Series averaging temperature sensors are available in two styles, the flexible TA and the rigid TAR. Both include a junction box housing connected to a copper sensing probe. Temperature is read along the whole length of the copper probe, and the readings are averaged. All TA Series devices are available with multiple probe lengths and a selection of sensor types for flexibility. All TA Series devices are warranted for five years.

NOTICE

- **This product is not intended for life or safety applications.**
- **Do not install this product in hazardous or classified locations.**
- **Read and understand the instructions before installing this product.**
- **Turn off all power supplying equipment before working on it.**
- **The installer is responsible for conformance to all applicable codes.**

No responsibility is assumed by Veris Industries for any consequences arising out of the use of this material.

Product Identification

Flexible Probe Length

TA ☐

*M = 6' (1.8m)
H = 12' (3.6m)
J = 24' (7.3m)

Rigid Probe Length "L"

TAR ☐

E = 12" (0.3m)
F = 18" (0.5m)
G = 24" (0.6m)
N = 30" (0.8m)
K = 36" (0.9m)
P = 48" (1.2m)

Sensor Type ☐

B = 100R platinum, RTD
C = 1k platinum, RTD
D = 10k, T2, Thermistor
H = 10k, T3, Thermistor
I = 1k Balco (Nickel-iron) RTD
J = 10k, Dale, Thermistor
M = 20k, NTC
N = 1800 ohm, Thermistor
P = 10mV/C, Linitemp
R = 10k US, Thermistor

Cal Certificate ☐

0 = None
1 = 1 point Cal validation **
2 = 2 point Cal validation ***

** Available only with sensor types I, J, N, and P.*
*** The 18", 24", 30", 36", and 48" rigid probes are calibrated to 22.5°C only.*
**** Not available for rigid probes longer than 12". Available for all flexible probe lengths.*

Specifications

Wiring	22AWG; 2-wire:RTD/Thermistor
LINITEMP	
Input Power	5 to 30VDC
Output	1µA/°C or 10mV/°C
Operating Temperature	-25° to 105°C (-13° to 221°F)
Accuracy *CALIBRATION ERROR:* *ERROR OVER TEMPERATURE:*	 1.5°C (35°F) typical; 2.5°C (37°F) max. at 25°C (77°F)* 1.8°C typical (35°F); 3.0°C (34°F) max. over 0° to 70°C (32° to 158°F) range 2.0°C (35°F) typical, 3.5°C (38°F) max. over -25° to 105°C (-13° to 221°F) range

**Room temperature error documented on each unit.*

 ©2014 Veris Industries

Alta Labs, Enercept, Enspector, Hawkeye, Trustat, Aerospond, Veris, and the Veris 'V' logo are trademarks or registered trademarks of Veris Industries, L.L.C. in the USA and/or other countries.
Other companies' trademarks are hereby acknowledged to belong to their respective owners.

Dimensions

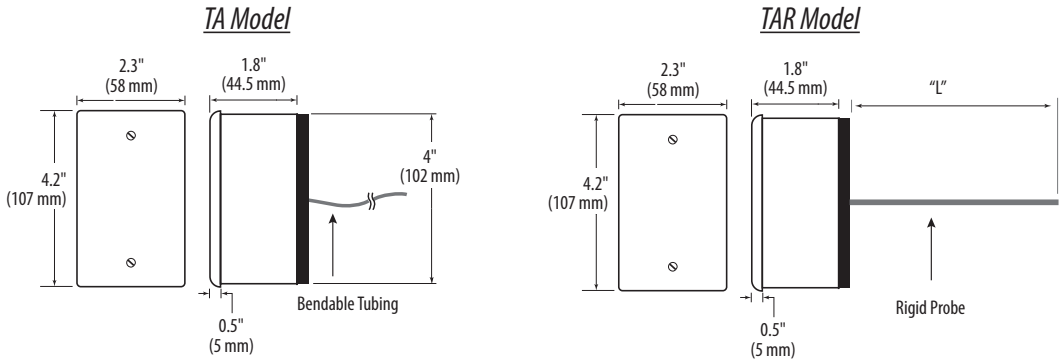

Installation

1. Drill a 1 3/16" diameter hole in the duct for the sensor probe and lug.
2. Affix the foam gasket material to the probe side of the junction box.
3. Insert the probe into the duct.
4. Secure the junction box housing to the outer surface of the duct using self-tapping screws (not included).
5. Wire as described below.

Veris ID	Sensor Type	Value	Wire Color
B	RTD	100 Ω Platinum	Red
C	RTD	1000 Ω Platinum	Orange
I	RTD	1000 Ω Balco (nickel-iron)	Black
N	Thermistor	1800 Ω	Green
K	Thermistor	10k Ω with 11k Ω Shunt	Red/Yellow
J	Thermistor	10k Ω Dale Curve	Yellow/White
D	Thermistor	10k Ω Type T2	Yellow
H	Thermistor	10k Ω Type T3	Yellow/Red
P	Linitemp	+15 V	Orange
		Signal	White
		Common	Blue

 ©2014 Veris Industries

Alta Labs, Enercept, Enspector, Hawkeye, Trustat, Aerospond, Veris, and the Veris 'V' logo are trademarks or registered trademarks of Veris Industries, L.L.C. in the USA and/or other countries.
Other companies' trademarks are hereby acknowledged to belong to their respective owners.

Thermistor Table

Class	Pt RTD		Balco RTD						
Type	100 Ohm	1000 Ohm	1000 Ohm	10k Type 2	10k Type 3	10k Dale	10k "G" US	20k	1.8k
Accuracy	±0.3°C	±0.3°C	±1% @70°C	±1.0°C	±0.2°C	±0.2°C	±0.2°C	Consult	Consult
	0.0385 curve	0.0385 curve		-50/150°C	0/70°C	-20/70°C	0/70°C	Factory	Factory
Temp. Response*	PTC	PTC	PTC	NTC	NTC	NTC	NTC	NTC	NTC

*PTC: Positive Temperature Coefficient

*NTC: Negative Temperature Coefficient

STANDARD RTD AND THERMISTOR VALUES (Ohms Ω)

°C	°F	100 Ohm	1000 Ohm	1000 Ohm	10k Type 2	10k Type 3	10k Dale	10k "G" US	20k	1.8k
-50	-58	80.306	803.06	740.46	692,700	454,910	672,300	441,200	1,267,600	63,880
-40	-40	84.271	842.71	773.99	344,700	245,089	337,200	239,700	643,800	35,680
-30	-22	88.222	882.22	806.02	180,100	137,307	177,200	135,300	342,000	20,720
-20	-4	92.160	921.60	841.00	98,320	79,729	97,130	78,910	189,080	12,460
-10	14	96.086	960.86	877.46	55,790	47,843	55,340	47,540	108,380	7,733
0	32	100.000	1000.00	913.66	32,770	29,588	32,660	29,490	64,160	4,940
10	50	103.903	1039.03	952.25	19,930	18,813	19,900	18,780	39,440	3,240
20	68	107.794	1077.94	991.82	12,500	12,272	12,490	12,260	24,920	2,177
25	77	109.735	1097.35	1,013.50	10,000	10,000	10,000	10,000	20,000	1,800
30	86	111.673	1116.73	1,035.18	8,055	8,195	8,056	8,194	16,144	1,496
40	104	115.541	1155.41	1,077.68	5,323	5,593	5,326	5,592	10,696	1,049
50	122	119.397	1193.97	1,120.52	3,599	3,894	3,602	3,893	7,234	750
60	140	123.242	1232.42	1,166.13	2,486	2,763	2,489	2,760	4,992	545
70	158	127.075	1270.75	1,210.75	1,753	1,994	1,753	1,990	3,512	403
80	176	130.897	1308.97	1,254.55	1,258	1,462	1,258	1,458	2,516	302
90	194	134.707	1347.07	1,301.17	919	1,088	917	1,084	1,833	230
100	212	138.506	1385.06	1,348.38	682	821	679	816.8	1,356	177
110	230	142.293	1422.93	1,397.13	513	628	511	623.6	1,016	139
120	248	146.068	1460.68	1,447.44	392	486	389	481.8	770	109
130	266	149.832	1498.32	1,496.28	303	380	301	376.4	591	87

 ©2014 Veris Industries

Alta Labs, Enercept, Enspector, Hawkeye, Trustat, Aerospond, Veris, and the Veris 'V' logo are trademarks or registered trademarks of Veris Industries, L.L.C. in the USA and/or other countries.
Other companies' trademarks are hereby acknowledged to belong to their respective owners.